PORTFOLIO

z a h r a g o u d a r z i r a d

PRE-PRESS AND DESIGNING

1.1 - The information should be presented on the design both in content, form and color according to the actual needs of the business or the customer.
1.2- Output 4 film.
1.3-Exposure the zinc plate. ...

Printing

Post printing process

3.1- glossy / matte lamination
3.2- hot gold/silver stamping
3.3- UV coating
3.4- Emboss

Zahra Goudarzirad.





1-طراحی ساختار بسته بندی بر اساس خواست کارفرما
2-هر فایل در ابعاد 50*70 یک عدد کامل جای میگیرد و فایل قالب تیغ اماده می شود.
3-آماده سازی صفحات زینک برای قرار گیری در دستگاه چاپ افست
4-آماده سازی فایل طلاکوب
5-آماده سازی فایل UV
7-تبدیل مقوای 100*70 به 50*70 برای استفاده در دستگاه چاپ دو ورقی
8-اعمال لمینت
9-ارسال برای دستگاه لترپرس و قالب تیغ
11-ارسال برای کارگاه جعبه چسبانی

ARAMIS

Offset printing process for Walnut (blue)		
Pre-press	Design a cylandrical shape package to contain 8 pieces of cotton candy.	Ivory board
Printing	Lithography,Heidelberg speed master 4 color (50*70) ,aluminuim plate	
Post-press	Matt Lamination, Gold Hot Stamping, UV Coating Manual glue box	

Dimention of package		
door	W: 192 mm H: 192 mm	
plate	W: 190mm H: 190 mm	
Sheet Size	700*500 mm	
Number of dielines in one sheet	1 door inside 1 plate inside 4 ribbons	1 door outside 1 plate outside

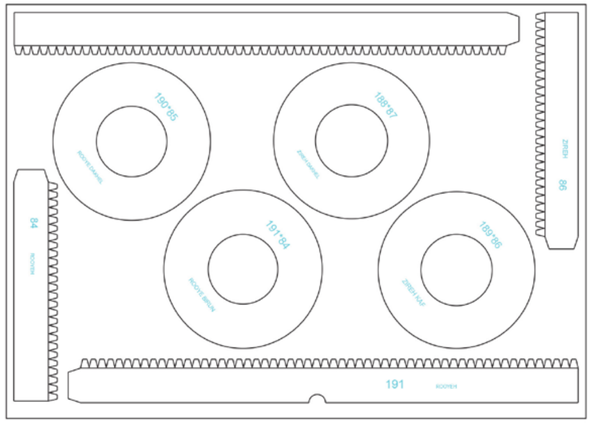

Zahra Goudarzirad.





ARAMIS
PASHIPS

combine deep expertise with an entrepreneurial mindset marked by fresh thinking and an appetite for risk.

ترکیب تجربه عمیق به همراه داشتن ذهنیت یک کار آفرین با ذهنی خلاق و اشتیاق برای ریسک بیشتر

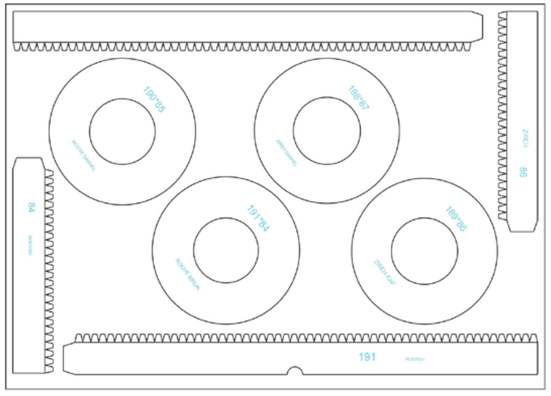

Offset printing process for Walnut (blue)

Pre-press	Design a cylandrical shape package to contain 8 pieces of cotton candy.	Ivory board
Printing	Lithography,Heidelberg speed master 4 color (50*70) ,aluminuim plate	
Post-press	Matt Lamination, Gold Hot Stamping, UV Coating Manual glue box	

Dimention of package		
door	W: 192 mm H: 192 mm	
plate	W: 190mm H: 190 mm	
Sheet Size	700*500 mm	
Number of dielines in one sheet	1 door inside 1 plate inside 4 ribbons	1 door outside 1 plate outside

Zahra Goudarzirad.





ARAMIS

طراحی با رویکرد مارکت جهانی

International design for product presence
in the global market.

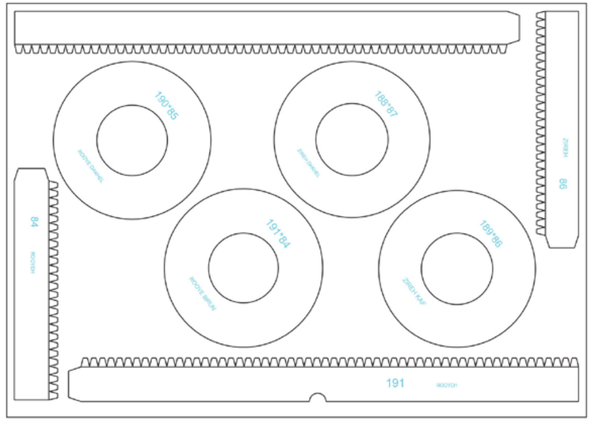

Offset printing process for pistachios flavor(green)		
Pre-press	Design a cylandrical shape package to contain 8 pieces of cotton candy.	graphic
Printing	Lithography,Heidelberg speed master 4 color (50*70) ,aluminuim plate	
Post-press	Matt Lamination, Gold Hot Stamping, UV Coating Manual glue box	

Dimention of package		
door	W: 192 mm H: 192 mm	
plate	W: 190mm H: 190 mm	
Sheet Size	700*500 mm	
Number of dielines in one sheet	1 door inside 1 plate inside 4 ribbons	1 door outside 1 plate outside

Zahra Goudarzirad.

ARAMIS COTTON CANDY

OSCAR

Dimention of package	
dieline	W: 344 mm H: 414 mm
Sheet Size	500*700 mm
Number of dielines in one sheet	2 box

طراحی استراکچر متفاوت همیشه سبب متفاوت بودن از سایر رقبا در بازار شده است. همچنین استفاده از استراکچر ایستاده برای مارکت جهانی از اهداف این طرح می باشد.





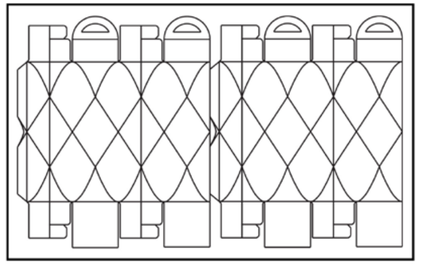

I put a handle to make it easy to carry. and also playing with polygonal shapes are always a great choise for a new structure, to make a big impact to your selling future.

Offset printing process for chocolate flavor(red)		
Pre-press	Design a stad up dieline, prepare letterpress file.	Ivory board
Printing	Lithography,Heidelberg speed master 4 color (50*70) ,aluminuim plate	
Post-press	Matt Lamination, Gold Hot Stamping, UV Coating	

Zahra Goudarzirad.

ARAMIS COTTON CANDY

OSCAR

Dimention of package	
dieline	W: 344 mm H: 414 mm
Sheet Size	500*700 mm
Number of dielines in one sheet	2 box

کاهش پرت کاغذ طراحی و تولید فایل قالب تیغ برای ابعاد مناسب استفاده در فروشگاه ها و شیرینی فروشی ها.

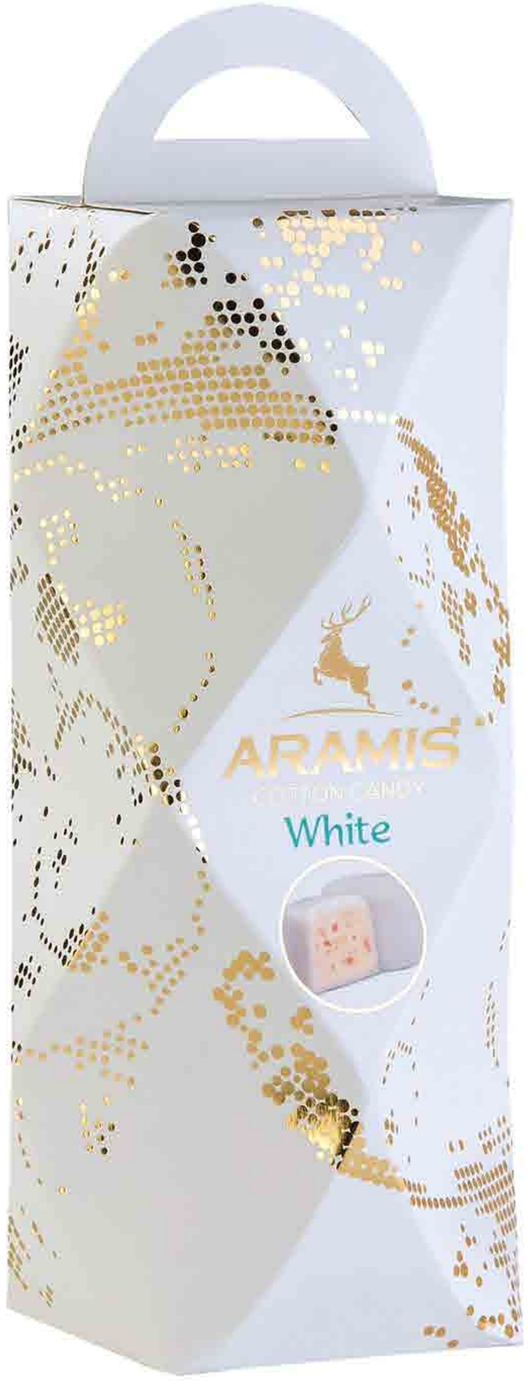



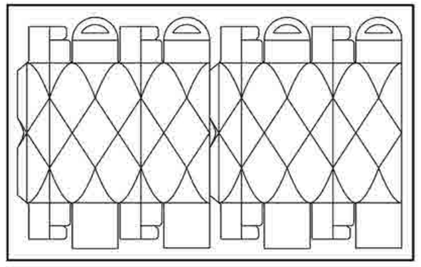

eco-friendly structure with reducing paper waste. 2 dielines in on sheet (50*70cm).
Designed to quickly glue.

Offset printing process for Vanilla flavor(white)		
Pre-press	create dieline, prepare diecut letterpress file, 4 zinc plate file,gold file	Ivoryborad
Printing	Lithography,Heidelberg speed master 4 color (50*70) ,aluminuim plate	
Post-press	Matt Lamination, Gold Hot Stamping, UV Coating	

Zahra Goudarzirad.

ARAMIS COTTON CANDY

OSCAR

Dimention of package	
dieline	W: 344 mm H: 414 mm
Sheet Size	500*700 mm
Number of dielines in one sheet	2 box

استفاده از اشکال هندسی , این بار به صورت خطوط منحنی سبب ایجا جذابیت, بالاتر رفتن دوام بسته بندی شده است.

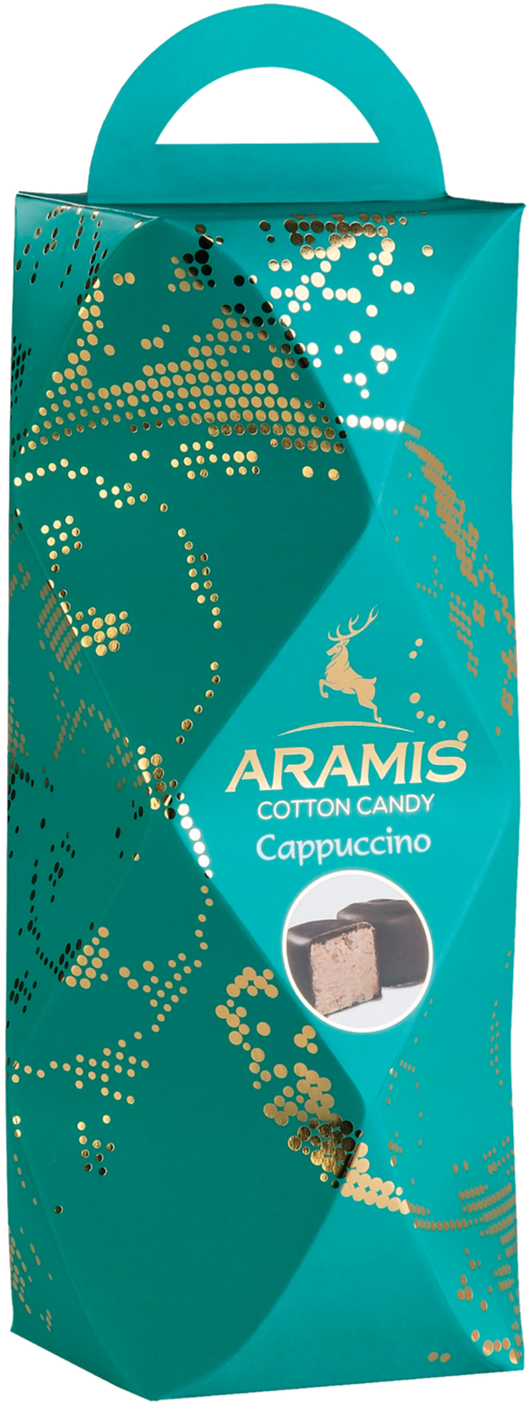



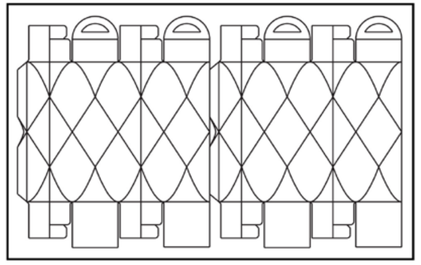

The final step in the offset printing process is finishing. This includes folding, binding, trimming, and packaging the printed material.

Offset printing process for Cappuccino flavor		
Pre-press	create dieline, prepare diecut letterpress file, 4 zinc plate file,gold file	Ivoryborad
Printing	Lithography,Heidelberg speed master 4 color (50*70) ,aluminuim plate	
Post-press	Matt Lamination, Gold Hot Stamping, UV Coating	

Zahra Goudarzirad.

ARAMIS COTTON CANDY

OSCAR

Dimention of package	
dieline	W: 344 mm H: 414 mm
Sheet Size	500*700 mm
Number of dielines in one sheet	2 box

طراحی استراکچر برای این بسته بندی با الهام از خطوط منحنی برای ایجاد یک بسته بندی قابل اعتماد انجام شده است. دارای یک لب چسب و دستگیره حمل.

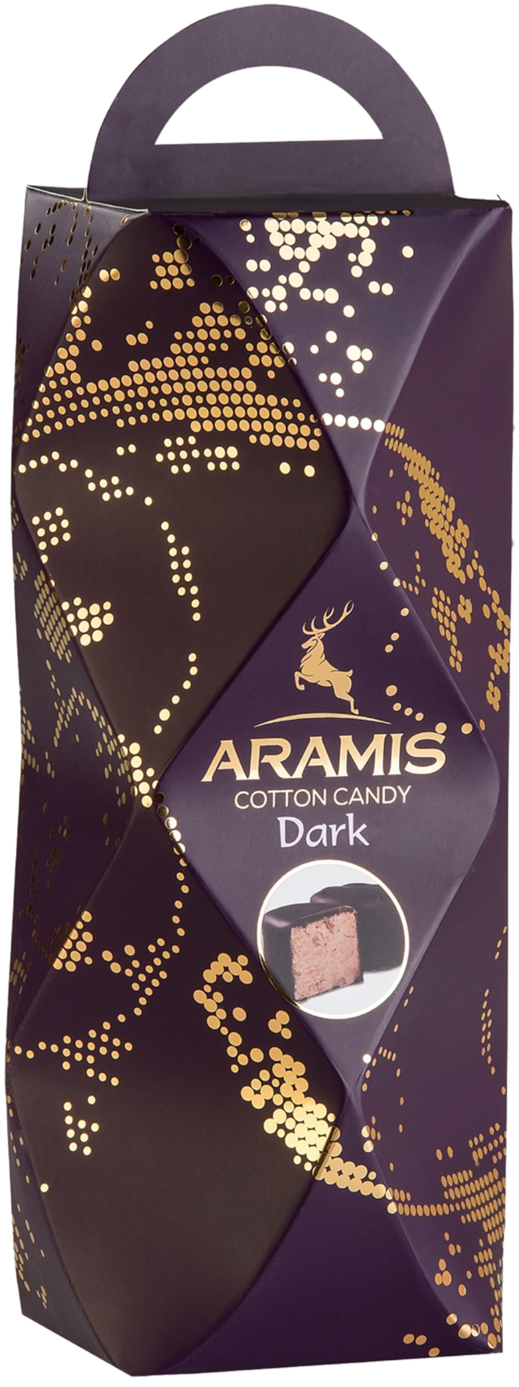



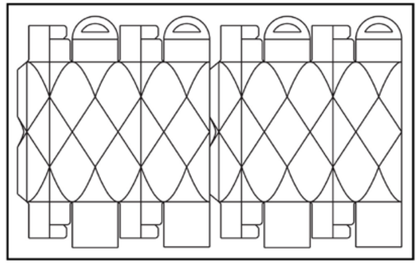

Product packaging design is the most influential element in a successful product launch.

Around 72% of customers agree that packaging design can influence their purchasing decision.

Offset printing process for cocoa dark flavor		
Pre-press	create dieline, prepare diecut letterpress file, 4 zinc plate file,gold file	Ivoryborad
Printing	Lithography,Heidelberg speed master 4 color (50*70) ,aluminuim plate	
Post-press	Matt Lamination, Gold Hot Stamping, UV Coating	

Zahra Goudarzirad.





COTTON CANDY PACKAGING DESIGN

ARAMIS

در این بسته بندی پوشش نهایی با یک سلفون وکیوم شده از محصولات درونی خود در مقابل عوامل محیطی محافظت میکند.

Dimention of package	
Cover	W: 466.969 m.m H: 433.970 mm
Conrainer Part	W: 403.469 mm H: 437.086 mm
Sheet Size	500*450 mm 600*450 mm
Number of dielines in one sheet	1 cover
Number of dielines in one sheet	1 container

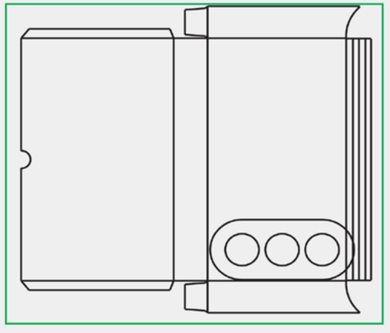

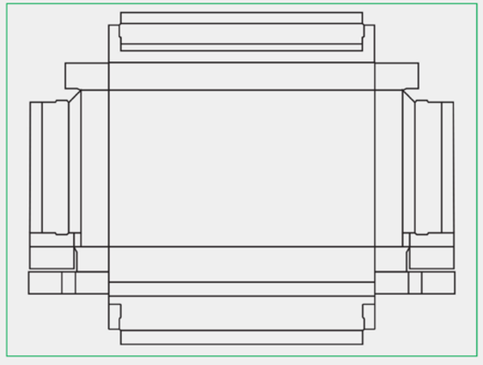

Offset printing process for saffron flavor(yellow)

Pre-press	Design a slider shape package to contain 15 pieces of cotton candy.	ivory board
Printing	Lithography,Heidelberg speed master 4 color (50*70) ,aluminuim plate, 4 color printing	
Post-press	Matt Lamination, Gold Hot Stamping, UV Coating	

Zahra Goudarzirad.



COTTON CANDY PACKAGING DESIGN

ARAMIS

A wrapping process at the end, protect it's insider chocolate material from environmental effects.

Dimention of package	
Cover	W: 466.969 m.m H: 433.970 mm
Conrainer Part	W: 403.469 mm H: 437.086 mm
Sheet Size	500*450 mm 600*450 mm
Number of dielines in one sheet	1 cover
Number of dielines in one sheet	1 container

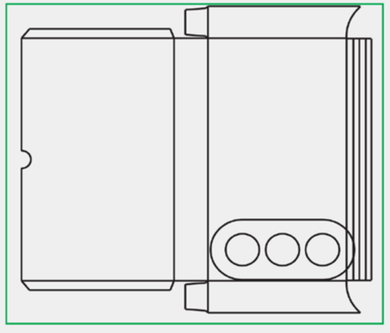

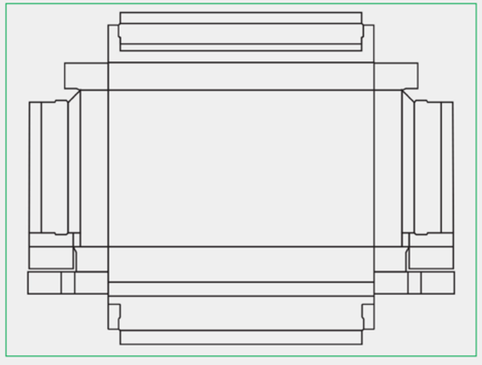

Offset printing process for cocoa flavor(red)

Pre-press	Design a slider shape package to contain 15 pieces of cotton candy.	ivory board
Printing	Lithography,Heidelberg speed master 4 color (50*70) ,aluminuim plate, 4 color printing	
Post-press	Matt Lamination, Gold Hot Stamping, UV Coating	

Zahra Goudarzirad.





COTTON CANDY PACKAGING DESIGN

ARAMIS

Supervising printing at Abianeh printery. and also about it's hot stamping, I prepare a file to make a 3 mm clitche with CNC.

نظارت بر چاپ بسته بندی پشمک آرامیس در چاپخانه ابیانه
ساخت کلیشه طلاکوب با ضخامت 3 mmبا دستگاه CNC.

Dimention of package	
Cover	W: 466.969 m.m H: 433.970 mm
Conrainer Part	W: 403.469 mm H: 437.086 mm
Sheet Size	500*450 mm 600*450 mm
Number of dielines in one sheet Number of dielines in one sheet	1 cover 1 container

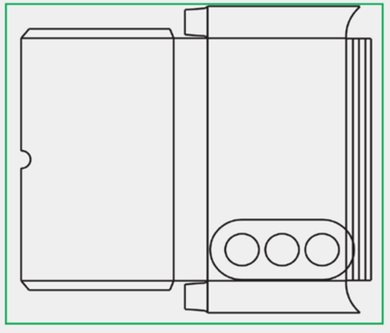

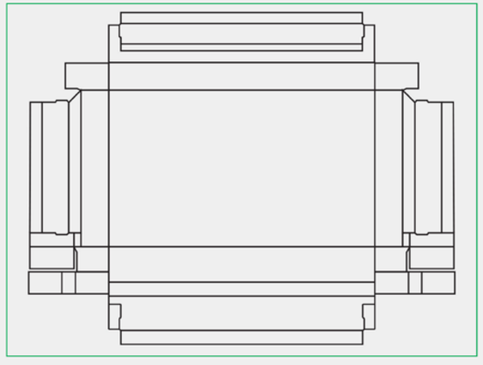

Offset printing process for Vanilla flavor(white)		
Pre-press	Design a slider shape package to contain 15 pieces of cotton candy.	ivory board
Printing	Lithography,Heidelberg speed master 4 color (50*70) ,aluminuim plate, 4 color printing	
Post-press	Matt Lamination, Gold Hot Stamping, UV Coating	

Zahra Goudarzirad.





COTTON CANDY PACKAGING DESIGN

ARAMIS

this package is consist of 4 parts. and 3 different materials. Ivory Board paper, hard plastic vacum, and cellophane.

استراکچر کشویی این محصول سبب راحتی استفاده از محصول و پذیرایی در میمهانی ها را دارد.

Dimention of package	
Cover	W: 466.969 m.m H: 433.970 mm
Conrainer Part	W: 403.469 mm H: 437.086 mm
Sheet Size	500*450 mm 600*450 mm
Number of dielines in one sheet	1 cover
Number of dielines in one sheet	1 container

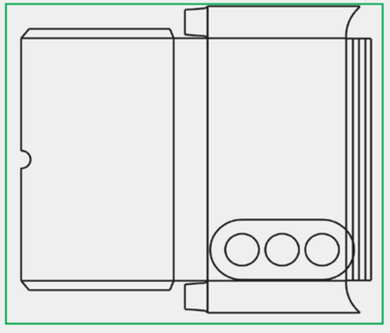

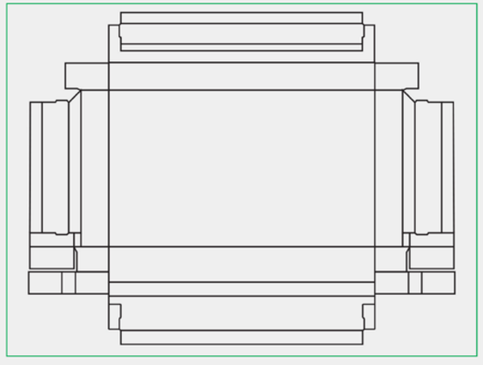

Offset printing process for mix flavor(blue)

Pre-press	Design a slider shape package to contain 15 pieces of cotton candy.	Ivory board
Printing	Lithography,Heidelberg speed master 4 color (50*70) ,aluminuim plate, 4 color printing	
Post-press	Matt Lamination, Gold Hot Stamping, UV Coating	

Zahra Goudarzirad.

Offset printing process for Kalleh cream cheese

Pre-press	Packaging design for Kalleh's refrigerated products for export.	graphic
Printing	Lithography,Heidelberg speed master 4 color (50*70) ,aluminuim plate, 4 color printing	
Post-press	Glossy Lamination both sides, letter press	



Dimention of package		
door	W: 145 m.m H: 126 mm	
plate	W: 140 mm H: 123 mm	
Sheet Size	600*450 mm	
Number of dielines in one sheet	2 door 2 plate	2 door Strip 2 plate Strip



For export

Kalleh.

Designing structure.
Supervising the manual gluing box .
Paying attention to the fact that the product is refrigerated and exposed to moisture and cold was one of the important conditions that should have been paid attention to. Using Ivory board cardboard and laminating the inside and outside of the packaging is one of the features of this product.

Cream Cheese PINKA PACKAGING DESIGN

Zahra Goudarzirad.

یه روز دایره ای خوشمزه...

Offset printing process for Kalleh cream cheese

Pre-press	Packaging design for Kalleh's refrigerated products for export.	graphic
Printing	Lithography,Heidelberg speed master 4 color (50*70) ,aluminuim plate, 4 color printing	
Post-press	Glossy Lamination both sides, letter press, Manual glue box	

For export

Kalleh.

Designing and producing two types of structures for one product. Paying attention to the visual features in terms of structure and placement in the refrigerator stand of the stores, creating diversity and visual appeal.





Dimention of package		
door	W: 144mm H: 144mm	
plate	W: 141 mm H: 141 mm	
Sheet Size	600*450 mm	
Number of dielines in one sheet	2 door 2 plate	2 door Strip 2 plate Strip



Zahra Goudarzirad.



Offset printing process for liquid saffron

Pre-press	ivory board material,insider dieline structure, diecut plate,zinc plate	graphic
Printing	Lithography,Heidelberg speed master 4 color (45*60) ,aluminuim plate	
Post-press	Matt Lamination, UV Coating	

طراحی بسته بندی زعفران مایع برای کمپانی مسرت

زعفران به عنوان یک محصول لوکس نیازمندطراحی لوکس نیز می باشد. طراحی متفاوت استراکچر و ایجاد خطوط منحنی, تعبیه یک پنجره و ارزش گذاری افزوده در فروشگاه ها جهت پرزنت یک محصول با کیفیت و با ارزش.

Dimention of package	
Cover	W: 268 mm H: 428 mm
Sheet Size	600*450 mm
Number of dielines in one sheet	2 box

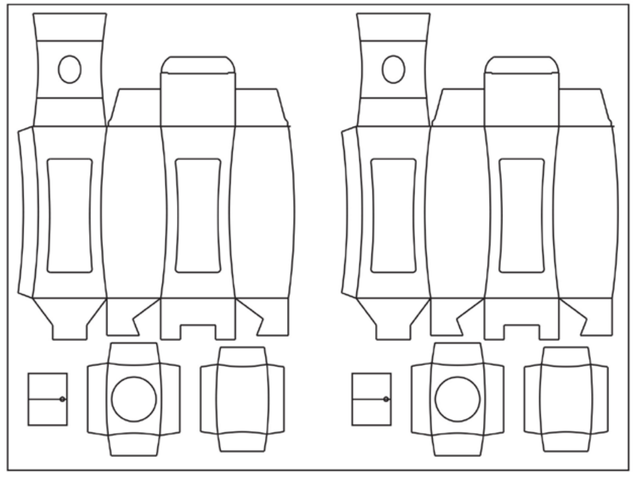

PACKAGING DESIGN
MASERAT
SAFRON

Zahra Goudarzirad.



Offset printing process for cocoa flavor(red)		
Pre-press	ivory board material,insider vacume dieline structure, diecut plate,zinc plate, hot stamping file,	Ivory board
Printing	Lithography,Heidelberg speed master 4 color (50*70) ,aluminuim plate	
Post-press	Matt Lamination, Gold Hot Stamping, UV Coating	

PACKAGING DESIGN

ARAMIS

COTTON CANDY

طراحی یک استراکچر به ابعاد کوچکتر برای حجم کمتری از محصول. عملکرد این بسته بندی به صورت کشویی میباشد. و دارای بسته بندی نهایی با سلفون میباشد.

insider vacume

Zahra Goudarzirad.

Dimention of package	
Cover	W: 291.469 mm H: 488.193 mm
Conrainer Part	W: 403.469 mm H: 437.086 mm
Sheet Size	500*700 mm
Number of dielines in one sheet	1 cover- 1 container

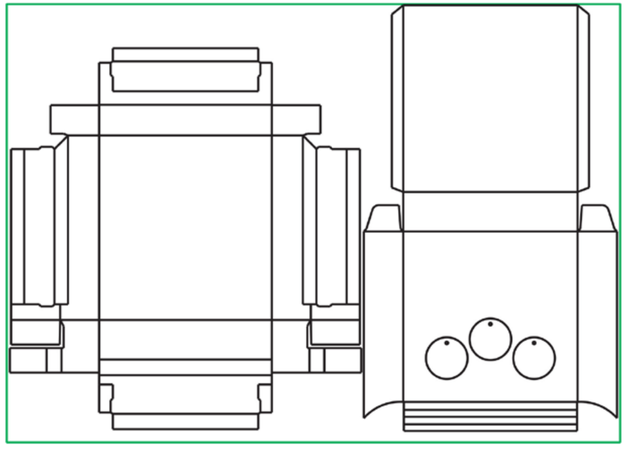



Offset printing process for vanilla flavor(white)		
Pre-press	Design a slider shape package to contain 8 pieces of cotton candy.	graphic
Printing	Lithography,Heidelberg speed master 4 color (50*70) ,aluminuim plate	
Post-press	Matt Lamination, Gold Hot Stamping, UV Coating	

PACKAGING DESIGN
ARAMIS
COTTON CANDY

Small structure for small amount of cotton candy of Aramis company.
it's a slider function packaging that I try to make it more user friendly for customers.

Dimention of package	
Cover	W: 291.469 mm H: 488.193 mm
Conrainer Part	W: 403.469 mm H: 437.086 mm
Sheet Size	500*700 mm
Number of dielines in one sheet	1 cover- 1 container

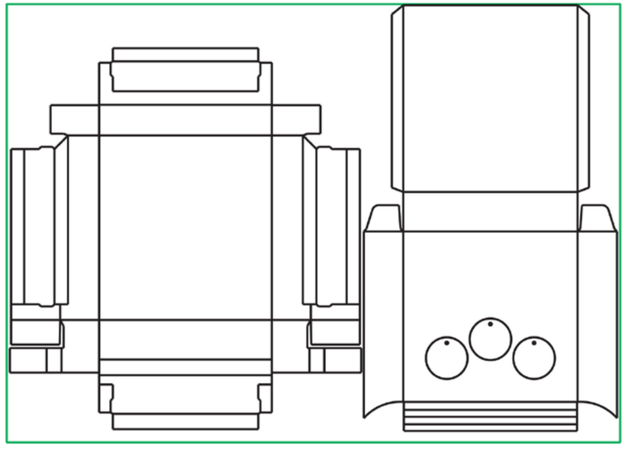

Zahra Goudarzirad.





Offset printing process for mix flavor(blue)

Pre-press	dieline structure, ivory board, diecut file, hot stamp file, UV file	Ivory board
Printing	Lithography,Heidelberg speed master 4 color (50*70) ,aluminuim zinc plate	
Post-press	Matt Lamination, Gold Hot Stamping, UV Coating	

ARAMIS

Dimention of package	
Cover	W: 291.469 mm H: 488.193 mm
Conrainer Part	W: 403.469 mm H: 437.086 mm
Sheet Size	500*700 mm
Number of dielines in one sheet	1 cover- 1 container

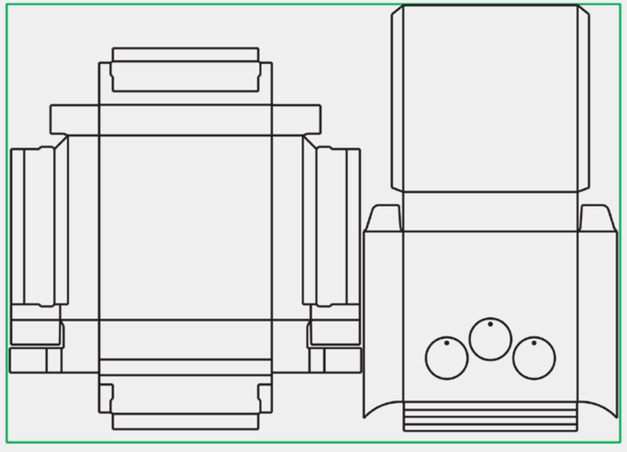

steps of my structure designing

The Initial Consultation.
Estimating the Project.
Creating The Dieline.
Creative Brief & Market Research.
The Design Phase.
Design Refinement.
Photography.
Printing Your Package.

Zahra Goudarzirad.



Offset printing process for saffron flavor(yellow)		
Pre-press	ivory board material,insider vacume dieline structure, diecut plate,zinc plate, hot stamping file,	graphic
Printing	Lithography,Heidelberg speed master 4 color (50*70) ,aluminuim plate	
Post-press	Matt Lamination, Gold Hot Stamping, UV Coating	

PACKAGING DESIGN
ARAMIS

طراحی بسته بندی که دارای 4 قسمت می باشد و به عنوان بسته بندی اولیه, ثانویه و .. شناخته میشود.تعبیه پنجره برای ارتباط یشتر خریدار و محصول صورت گرفته است.

بعد از چاپ افست و لمینیشن فایل طلاکوب را اجرا می شود و به مرحله قالب تیغ میرسد.در نهایت در کارگاه جعبه چسبانی دستی به اتمام می رسد.

Dimention of package	
Cover	W: 291.469 mm H: 488.193 mm
Conrainer Part	W: 403.469 mm H: 437.086 mm
Sheet Size	500*700 mm
Number of dielines in one sheet	1 cover- 1 container

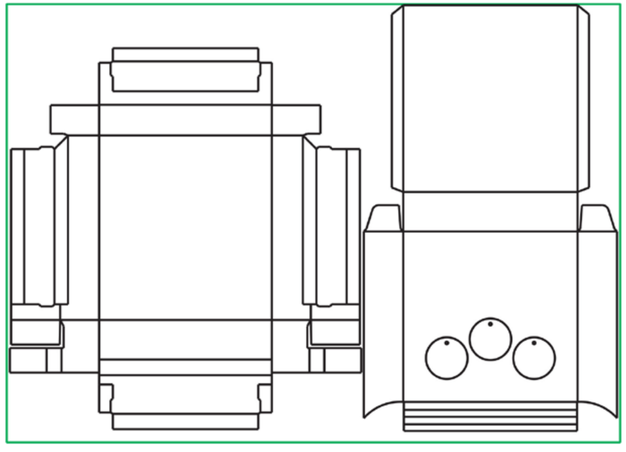

Zahra Goudarzirad.

Award winner of the 6th National Toy Festival

برنده جایزه طراحی بسته بندی جشنواره بین المللی اسباب بازی

Golvareh

Packaging structure design for Ahook Toys company for Golvareh game.

برای طراحی این محصول ,استراکچر هسته اصلی خود بازی را در نظر گرفته ام.



Dimention of package	
Conrainer Part	W: 582 mm H: 265 mm
Sheet Size	600*900 mm
Number of dielines in one sheet	3 box





Offset printing process for Golvare game		
Pre-press	Design a totally new shape for a game considering it's essence.	graphic
Printing	Lithography,Heidelberg speed master 4 color (60*90) ,aluminuim plate	
Post-press	glossy lamination,letter press, manual glue box making process	

Zahra Goudarzirad.



Dimention of package		
door	W: 192 mm H: 192 mm	
plate	W: 190mm H: 190 mm	
Sheet Size	700*500 mm	
Number of dielines in one sheet	1 door inside 1 plate inside 4 ribbons	1 door outside 1 plate outside

شیرین دخت یک برند ایرانی کیک خانگی می باشد که برای طراحی بسته بندی محصولات خود به یک ساختار با دوام و لمینت شده داخل و خارج احتیاج داشت. طراحی یک پنجره برای حصولات غذایی از جمله ویژگی های این طرح است.

Shirindokht



Offset printing process for Shirindokht		
Pre-press	Design al cube shape packag for cake. prepare a window for it and letter press.	Ivory board
Printing	Lithography,Heidelberg speed master 4 color (50*70) ,aluminuim plate	
Post-press	Matt Lamination inside and out, UV Coating Manual glue box	

BAKERY PACKAGING DESIGN

Zahra Goudarzirad.

HAJ ABDOLLAH
PACKAGING DESIGN
MILANGO

A packaging structure and graphic design for HAJ ABDOLLAH company.
Designing an uncut dieline, which make it easier to fold and make it ready for pack.
playing role of plate for cotton candies and charming outlook make it more adorable.

Offset printing process for chocolate flavor(cream)		
Pre-press	Design a dieline for cotton candy gift box.prepare it's diecut file.	graphic
Printing	Lithography,Heidelberg speed master 4 color (100*45) ,aluminuim plate	
Post-press	Matt Lamination, Gold Hot Stamping	

طراحی بسته بندی که دارای یک وکیوم پلاستیکی و بعد یک ساختار مقوایی و در نهایت با سلفون پلمپ می شود. دارای ساک کاغذی میباشد.

Dimention of package	
Conrainer Part	W: 1000 mm H: 450 mm
Cover	W: 400 mm H: 460 mm
Sheet Size	1000*450 mm 500*700 mm
Number of dielines in one sheet	1 container
Number of dielines in one sheet	2 cover

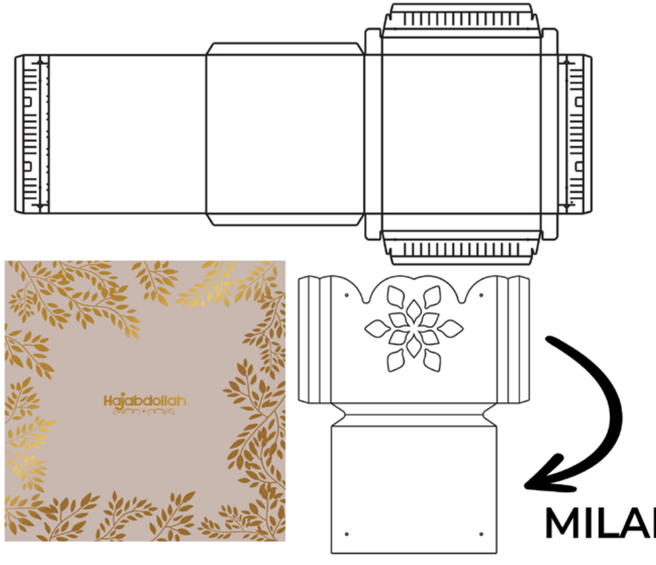

MILANO'S hand bag



Zahra Goudarzirad.

PERFUME
Packaging Design

NUEVO
Perfumes
European Fragrance
Eau De Perfum

طراحی استند برای عطر نوآوا با در نظر گرفتن جایگذاری 6 محصول برای ارائه در مراکز آرایش و بهداشتی.عدم وجود لب چسب و اتصال با قفل های مقوایی,استفاده از مقوای فلوت دار به جهت پایداری بیشتر در مدت زمان طولانی تر .

printing process		
Pre-press	design dieline, diecut file	E-Flute
Printing	Litho lamination	
Post-press	matte lamination, UV coating, letterpress, folding and glue	

لمینت بعد از مرحله چاپ با دستگاه افست انجام میشود که یک سلفون مات با حرارت روی کاغذ لمینیت می شود و از جوهر چاپ شده و اسکراچ جلوگیری میکند.

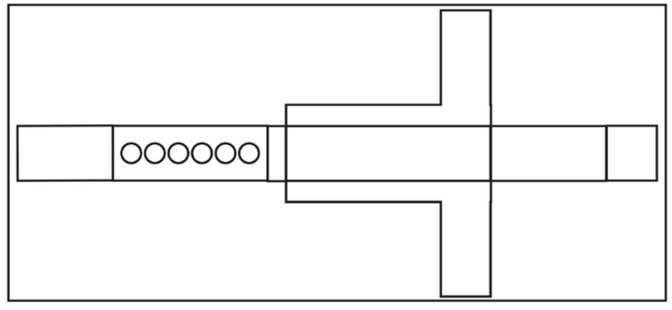





Dimention of package		
stand	W: 975 mm H: 438 mm	
Sheet Size	1000*450 mm	
Number of dielines in one sheet	1 stand	

Zahra Goudarzirad.

Retail-Stand Packaging Design

Moisturizing cream

Explore the art and science behind packaging design, that not only catches the eye, but guides consumer decisions

Dimention of package	
Conrainer Part	W: 866mm H: 840mm
Sheet Size	90*100 cm
Number of dielines in one sheet	1 box



Printing process for Aris packaging

Pre-press	Design a structure for Aris Cosmetics brand. E-Flut cardboard material. die cut	graphic
Printing	printing on a separated sheet and then lamination.	
Post-press	matt lamination,diecut process and folding	

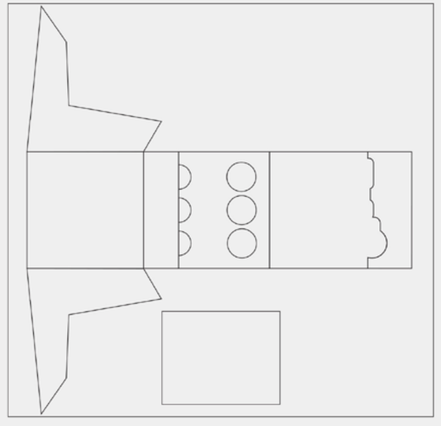





جستجوی دانش و هنر در طراحی استراکچر که نه تنها نگاه را جذب میکند بلکه تصمیمات خریدار را به خودجلب می کند.

Zahra Goudarzirad.

PAPCO STATIONERY

Stand Packaging Design

card holder.

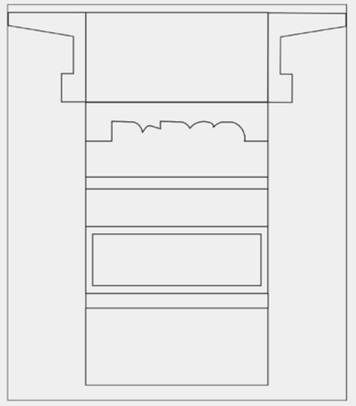

طراحی استند جا کارتی به سفارش شرکت پاپکو
برای ارائه در شهر کتاب ها و لوازم التحریر
استفاده از لوگو مجموعه در دایکات سبب ایجاد
جذابیت بصری در پرزنت محصولات خود شده است
که اجرای این استراکچر با مقوای فلوت دار
استحکام و قدرت به آن بخشیده است.

printing process for PAPCO card holder		
Pre-press	Design a die cut Ordered by Popco to present to stores.	graphic
Printing	4 colorCMYK (100*70) ,aluminuim plate	
Post-press	Matt Lamination. Manual glue box	

Dimention of package		
Conrainer Part	W: 590mm H: 660mm	
Sheet Size	600*700	
Number of dielines in one sheet	1 stand	







Zahra Goudarzirad.

CONCEPT

NUTIE







Natai is a package that provides the use a container for nuts and a container for the shell, and the edges that we see when opening are actually to prevent the pistachio skin from mixing with the nuts themselves.

در این بسته بندی توجه به طراحی ساختار بدون لب چسب برای من حائز اهمیت بود. رجوع به اریگامی و ایجاد یک حجم از یک سطح بدون چسب و برش از جمله ویژگی های بارز این طرح می باشد.

Offset printing process for NUTIE		
Pre-press	design dieline	graphic
Printing	Lithography,Heidelberg speed master 4 color (50*70 cm) ,aluminuim plate	
Post-press	glossy lamination,letter press, manual making without tape.	

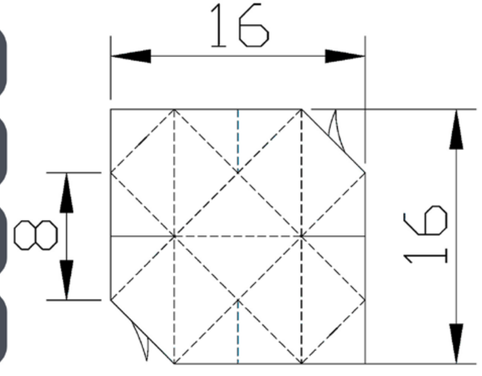

Dimention of package		
Conrainer Part	W: 160 mm H: 160 mm	
Sheet Size	500*700 mm	
Number of dielines in one sheet	12 box	

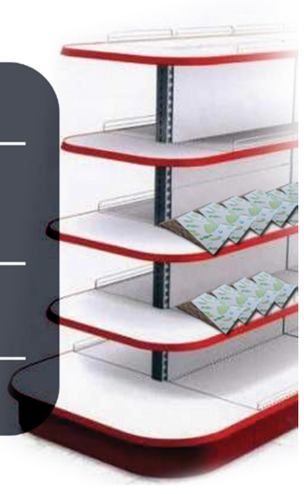

Zahra Goudarzirad.



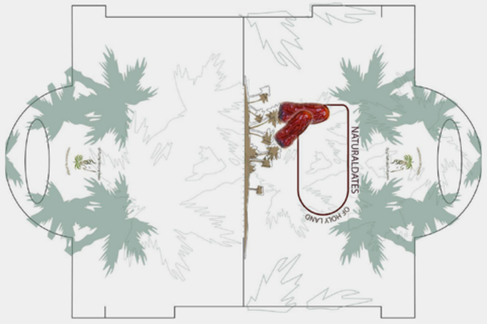

جایگـذاری پنجـره بـرای محصـولات غذایی
باعـث ایجـاد اطمینـان بیشـتر در خریـدار
میشودو فروش را بالا می برد.
اسـتفاده از دو متریـال مقـوایی و طلـق
منعطف .

DATA PACKAGING DESIGN

ROTAB MAZFATI
BAM.

Unique structure for BAM company.trying to enhance the persian sambols. using the shape of dots of Farsi writing. Also put a window make it more eye catching. contain secondary packaging of plastic to protect from leak and other environmental situations.



Offset printing process for data packaging		
Pre-press	dieline, diecut file,4 zinc plate, window patching	Ivory board
Printing	Lithography,Heidelberg speed master 4 color (50*70) ,aluminuim plate	
Post-press	Matt Lamination, UV Coating	

Dimention of package		
Conrainer Part	W: 300 mm H: 640mm	
Sheet Size	500*700 mm	
Number of dielines in one sheet	2 dieline	

Zahra Goudarzirad.

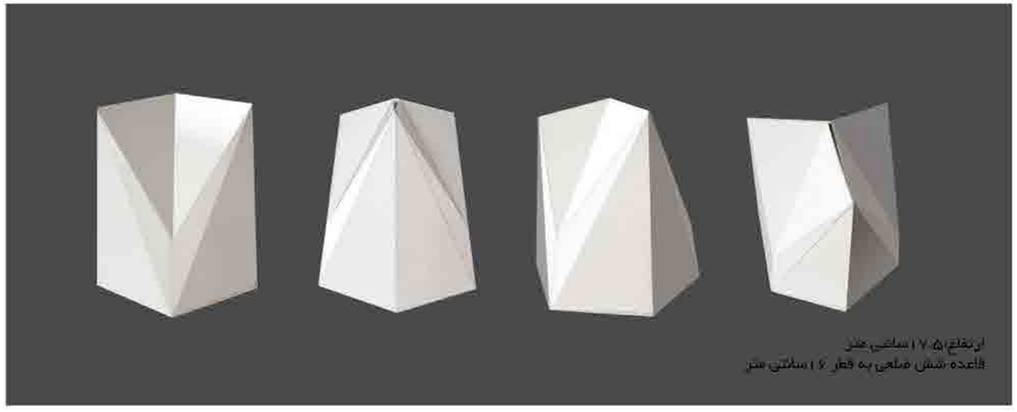

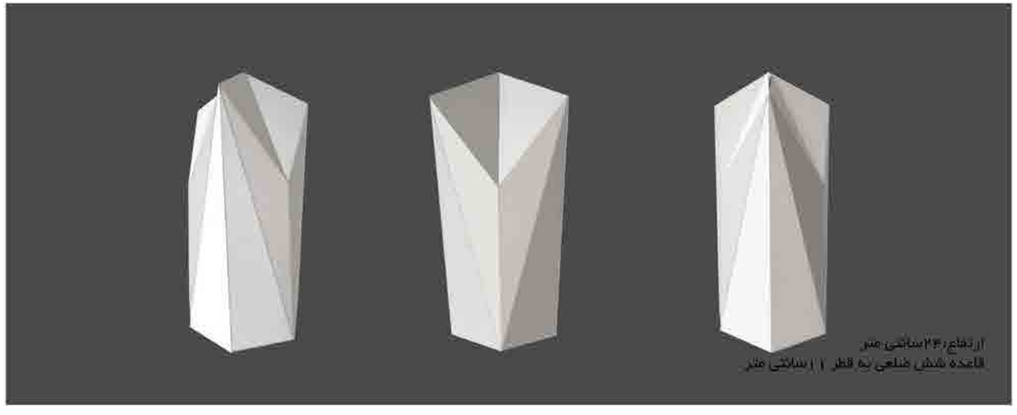

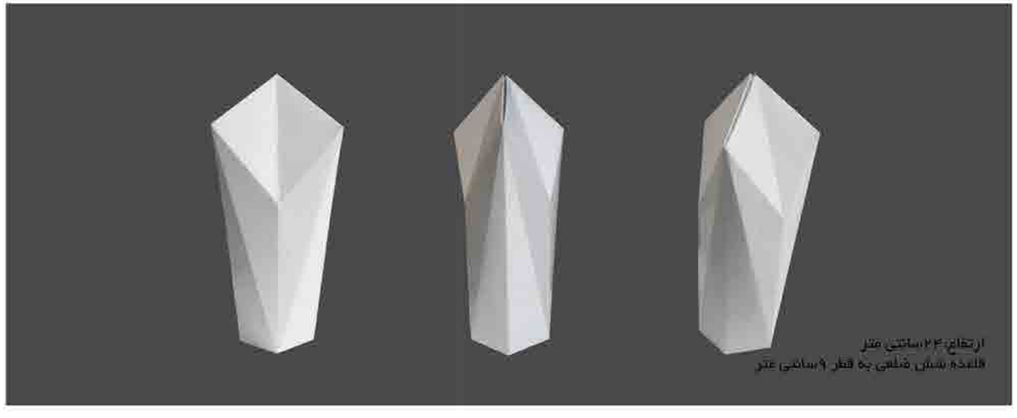

CONCEPT

Zahra Goudarzirad.

material **Ivory board**

stand up gift packaging design for chocolate.

Dimention of package	
Conrainer Part	W: 480mm H: 390 mm
Sheet Size	500*700 mm
Number of dielines in one sheet	2 box

CONCEPT
Zahra Goudarzirad.

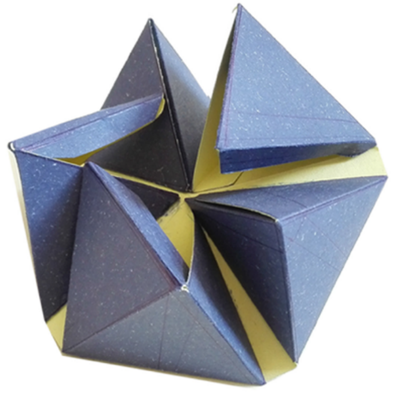

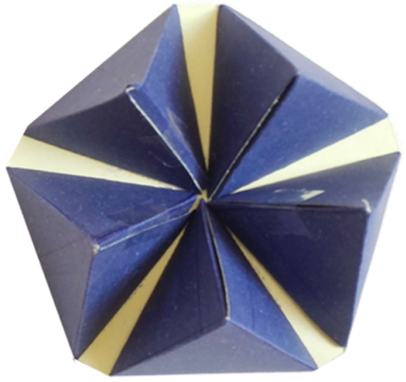

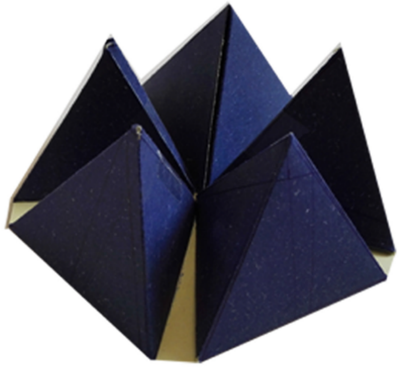

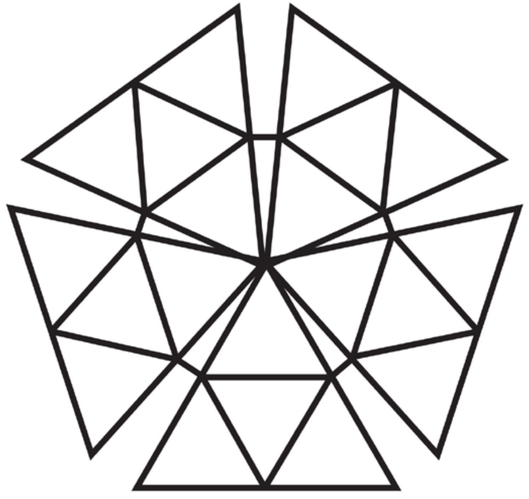

material	Ivory board

Dimention of package	
Conrainer Part	W: 295mm H: 277 mm
Sheet Size	500*700 mm
Number of dielines in one sheet	3 box

CONCEPT
Zahra Goudarzirad.



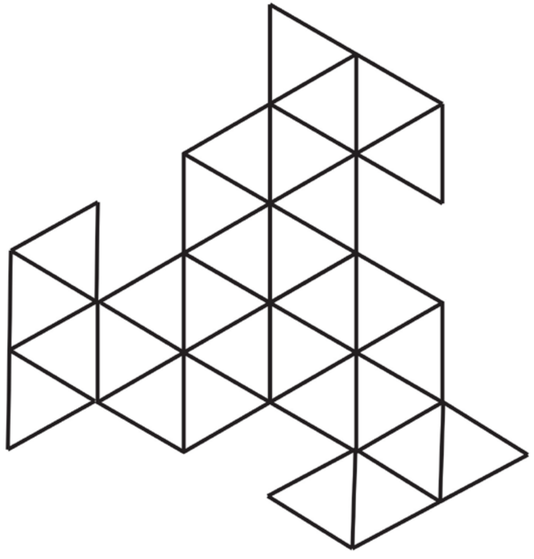

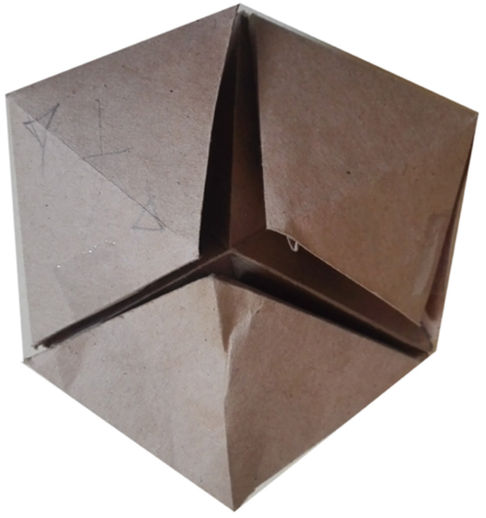

material	Ivory board

Dimention of package	
Conrainer Part	W: 353mm H: 370 mm
Sheet Size	500*700 mm
Number of dielines in one sheet	2 box

CONCEPT

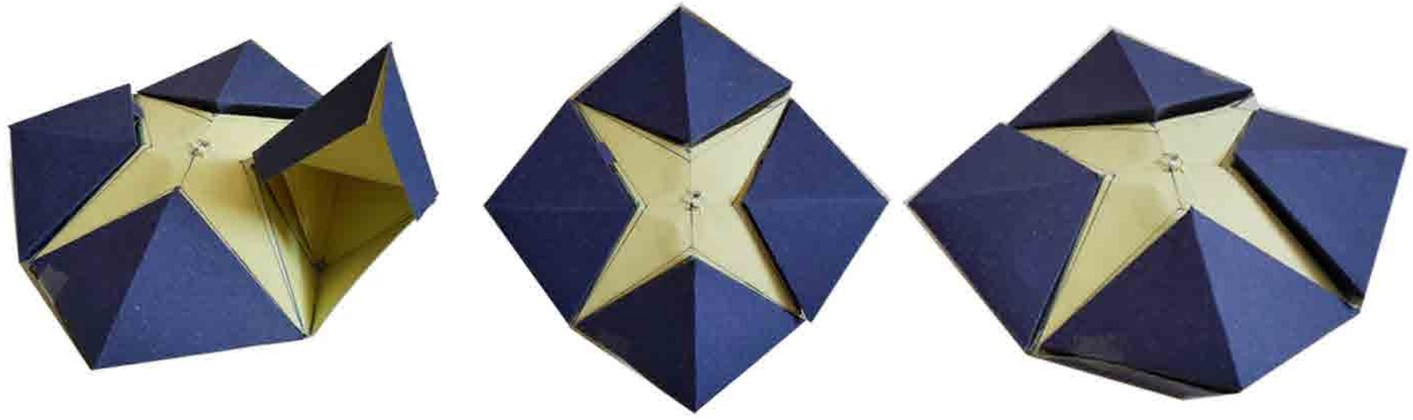

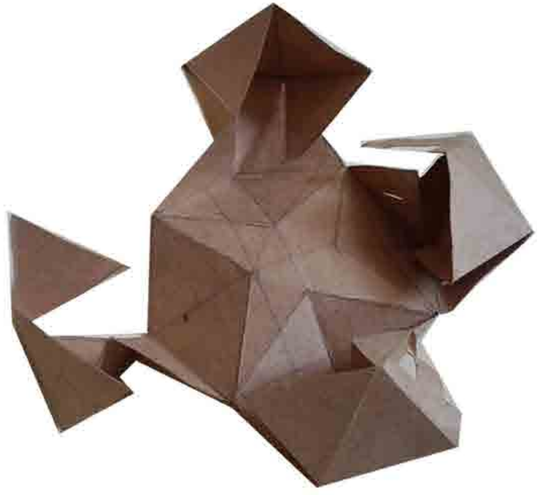

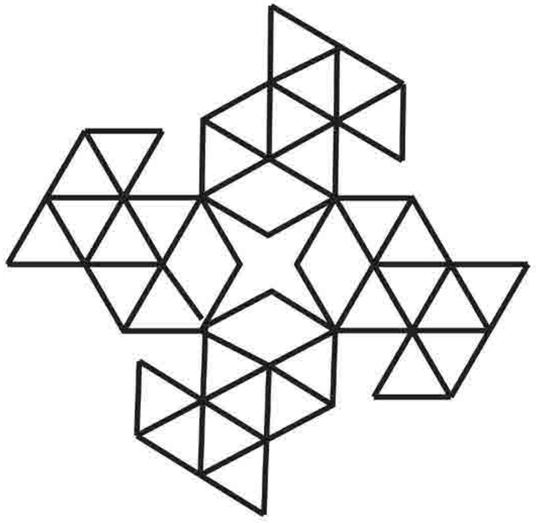

material	Ivory board

As I start my work as a packaging structure designer, I try to make a stucture which is really unique, and contain several places to put and seperate them.
using geometrical shapes are always been a Inspiration for me.

Dimention of package	
Conrainer Part	W: 480mm H: 480 mm
Sheet Size	500*700 mm
Number of dielines in one sheet	1 box

Zahra Goudarzirad.